Measurement list

01/06/2014 20/10/20

Style Info

Brand	**Clique**	**Style**	Classic Lincoln SS
Style (art) no.	028244	**Gender**	Mens
Season	S/S 2015	**Designer**	---
Theme	Sport	**Size**	XS-5XL
Status	9-Production/Approved	**Tech. Designer**	anna.nyborg@newwave.cn

BW Picture

Production Size Specification

Meas. descript.	XS	S	M	L	XL	XXL	3XL	4XL	5XL								Toler

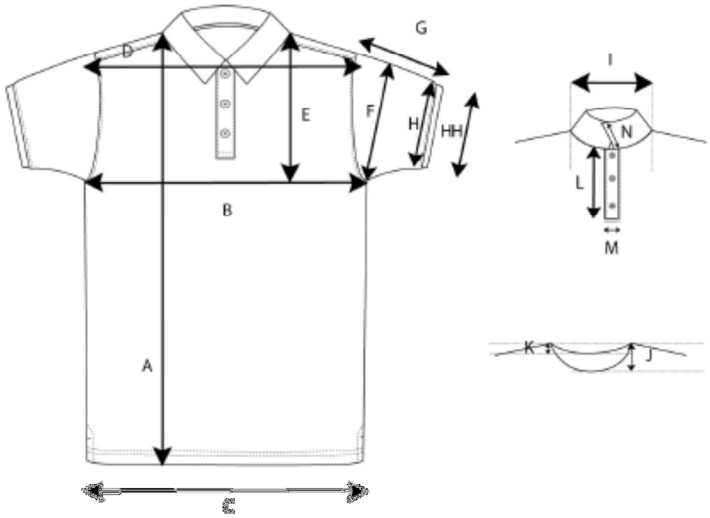

Production Size Specification

	Meas. descript.	XS	S	M	L	XL	XXL	3XL	4XL	5XL								Toler
A	Body length HPS	65,00	68,00	71,00	74,00	78,00	82,00	86,00	90,00	95,00								1
B	1/2 Chest	46,00	50,00	54,00	58,00	63,00	68,00	73,00	78,00	83,00								1